KLEEN BREAK MODEL 425
FOR SURFACE MOUNT CONCRETE INSTALLATIONS

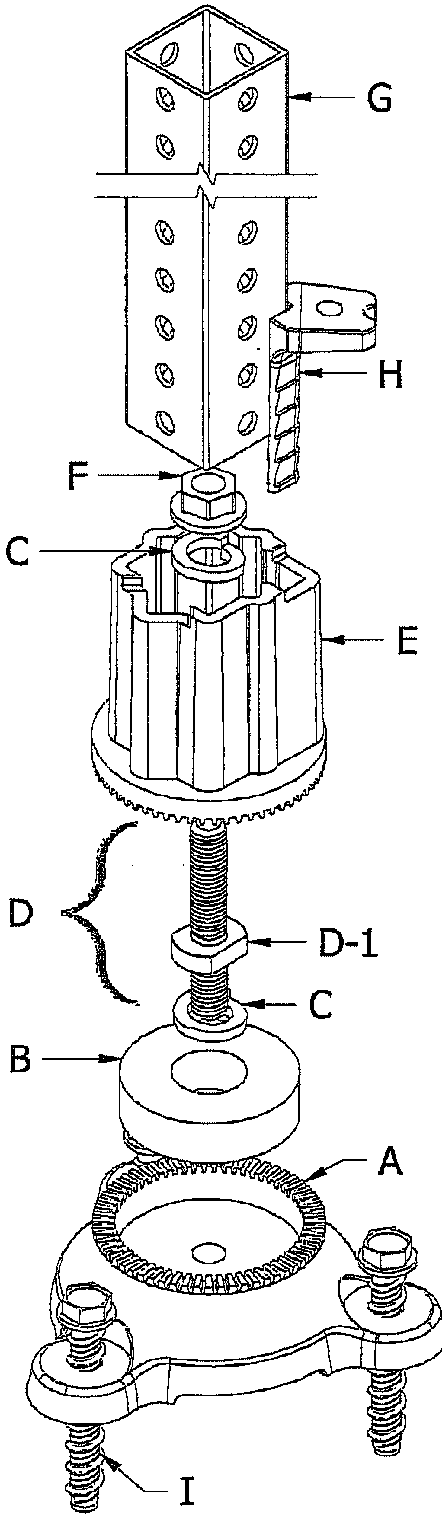

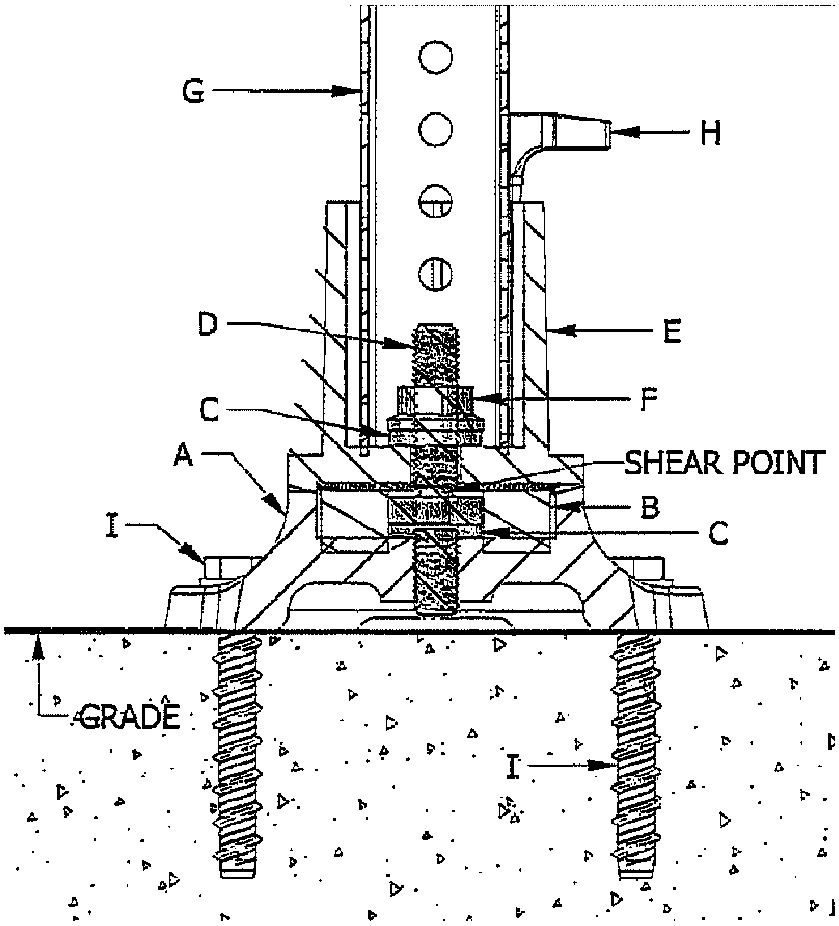

INSET A

PARTS LIST		PART NUMBERS	
A.	SURFACE MOUNT ANCHOR BASE	A.	SMK83-G
B.	RUBBER BUSHING	B.	RB30-EPDM
C.	LOCK WASHERS	C.	SBH5848-Z
D.	5/8"-11 x 4" SHEAR BOLT	D.	SBH5848-Z
D-1	SHOULDER	D-1	SBH5848-Z
E.	TOP HALF COUPLER	E.	TX175-200-G
F.	5/8"-11 SERRATED FLANGE NUT		
G.	SIGN SUPPORT (12 GAUGE SQUARE POST)		
H.	SIGN SUPPORT LOCKING WEDGE	H.	LWX35-G
I.	CONCRETE MOUNTING FASTENER (NOT INCLUDED)		

NOTES

1. BREAKAWAY ANCHORS WILL BE INSTALLED ON ALL SIGNS THAT ARE PLACED IN CONCRETE.
2. PROVIDE EXTRA SHEAR BOLT & LOCK WASHERS TO CITY.
3. REFER TO SIGN PLAN SHEETS FOR SIGN SIZE AND INSTALLATION LOCATIONS.
4. SEE DETAIL STR-22 FOR SIGN SETBACK REQUIREMENTS.
5. SEE DIVISION 2, PART A & MnDOT 2564 FOR FURTHER INFORMATION.
6. DETAILS FOR SPECIFICATION http://www.x-sqrd.com/PROD-INFO/KLEEN_BREAK_CI.pdf

CITY OF BURNSVILLE - ENGINEERING DEPT.

SQUARE TUBULAR SIGN POST BREAKAWAY

Plate No.	STR-24
Revision Date	02/2015

File Location:
S:\Details\english\Street\STR24-square post breakaway.dwg