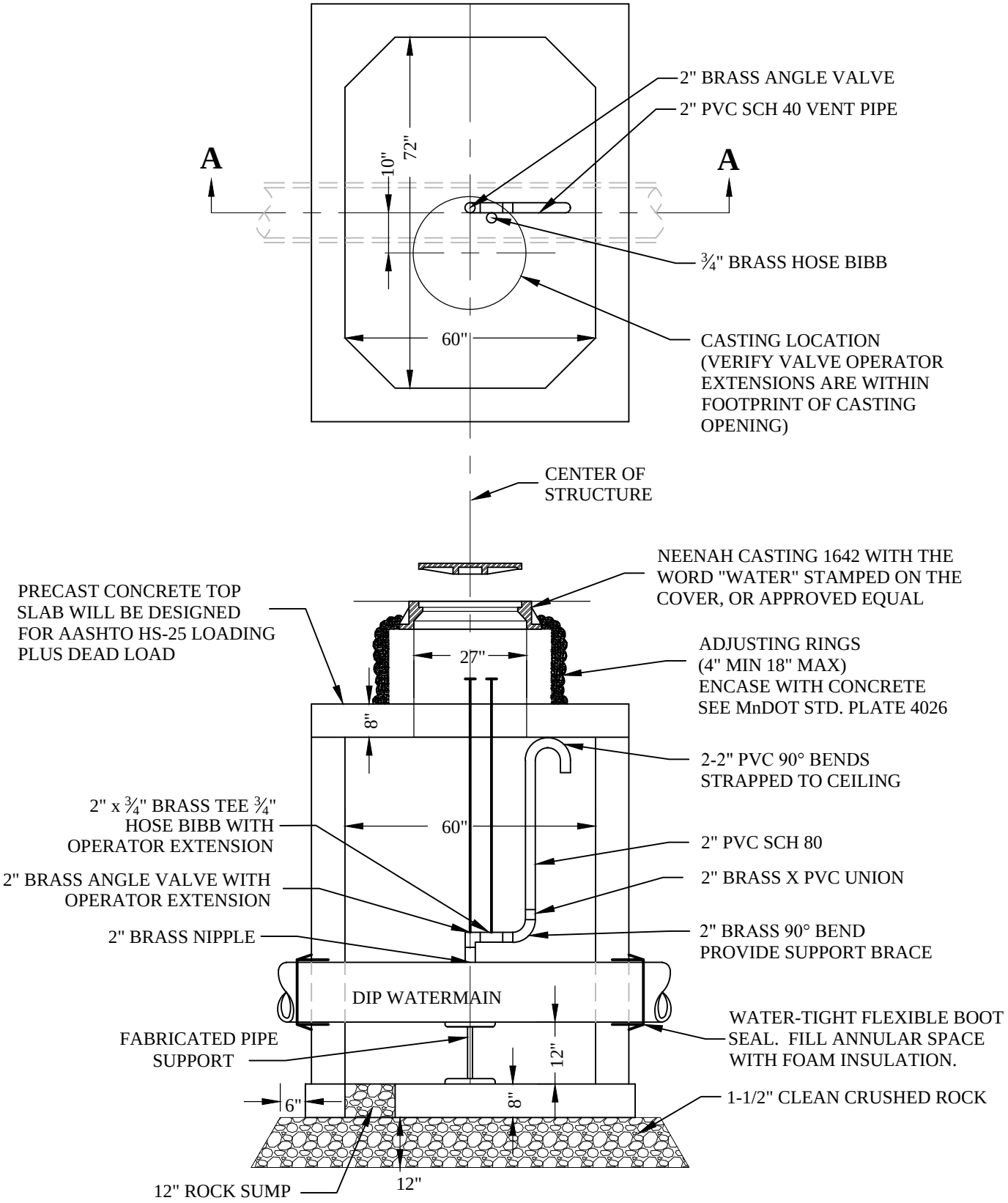

SECTION A-A

CITY OF BURNSVILLE - ENGINEERING DEPT.

WATERMAIN AIR RELEASE MANHOLE (MANUAL)

Plate No.	WM-8
Revision Date	11/2013

File Location:
S:\Details\english\Watermain\WM08_air_release.dwg